paraphrase

by Paraphrase Paraphrase

Submission date: 24-Nov-2021 10:14AM (UTC-0500)
Submission ID: 1712036974
File name: ME588_Lab_report_template_Revised.docx (2.72M)
Word count: 1523
Character count: 8046

American University Of The Middle East

ME588: Mechatronics

Fall 2021

Lab Report x

Student name:

Student ID:

Instructor: Mr. Ahmad Alsmadi

Section: xx

Submission Date: xx/xx/xxxx

Abstract

This information recaps the implementation and assignments done in the previous two Labs units for utilizing myRIO 1900 gear to link with the exterior actual apparatuses and to recite or inscribe the numerical motion, where LEDs and Pushbuttons utilized to device this processes, where LAB four delivers a comprehensive stage on how to generate a fresh myRIO venture to achieve additional skill of the myRIO progress preferences to create a link among LABVIEW and myRIO additionally retrieving some of the integral beams like the accelerometer, whereby we cultured from this assignment the key makers of connecting the myRIO with a database, afterwards that we erudite regarding the Discrete LED and it's configuration then the idea of joining the LED in a circuit or with DIO of myRIO with an appropriate contemporary limit resistor. Lab five assesses the push-button configuration and its electrical impression then the appropriate link and connecting of the push-button with myRIO to quantify the numerical standards.

Keywords: Discrete LED, Push button, LABVIEW, myRIO 1900.

Table of Contents

Abstract 2

Table of Contents 3

List of Figures 4

List of Tables ..... **Error! Bookmark not defined.**

Introduction 5

Procedure 8

Conclusion 10

References 11

Appendices 11

List of Figures

Figure 1: myRIO-1900 5
Figure 2: Typical types of LEDs 6
Figure 3: interfacing LED with myRIO 7
Figure 4: interfacing pushbutton with myRIO 7
Figure 5: Schematic diagram of traffic light 8
Figure 6: schematic diagram of Lab 5 exercise 9
Figure 7: Block Diagram of traffic light exercise 11
Figure 8:Front Panel Traffic light exercise 12
Figure 9: Wiring diagram expertise one 12
Figure 10: Block diagram of true case in expertise two 13
Figure 11: Front panel of expertise two 14
Figure 12: Block diagram of false case in expertise two 13
Figure 13: Wiring Diagram of Lab five exercise 15

Introduction

This information is proposed to analyze the link amid myRIO and the actual apparatuses such as push button and distinct LED, thus the procedural experience appraised for all the mechanisms that have been utilized, where in Lab four it was fascinated to assess the measures of generating a fresh myRIO venture, where myRIO is a uniting gear in charge of connecting amid LABVIEW and the actual submissions to regulate degree, observe or examine every exterior indication or procedure. MyRIO gear is presented in diagram (1), presented by state apparatus which is a moveable modifiable I/O appliance to aid the learners to scheme the regulator structure for those robotics or every mechatronics schemes. myRIO enables the linking among the actual scheme with the CPU whereby it offers referent ideas (AI) for the linear sign like appliances, referent output (AO) for the liner regulator like motor speed resistor or valve control, numerical input and output jots (DIO) for interpreting the alphanumeric motions from controls or devices and inscribe a numerical indication for every alphanumeric regulator concern. myRIO-1900 gear attaches to a mass CPU by UBS, similarly offers broadcast communication. For additional specifics concerning the pinout appendix [A] and the comprehensive design of the myRIO-1900 gear, is presented in the pictorial [1].

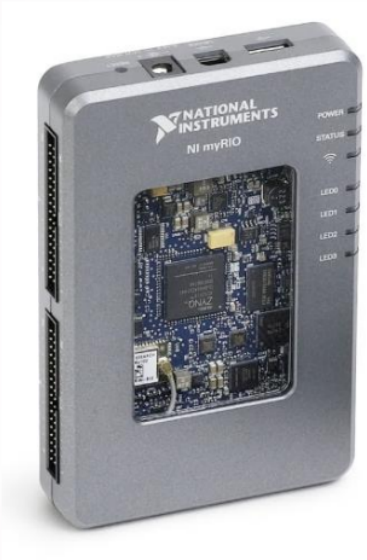

Figure 1: myRIO-1900

Furthermore, it has was revised the mechanical depiction of the distinct LEDs and in what way to place it in a trail or in what manner to connecting myRIO with a separate LED. To begin with, the distinct Light Emitting Diode or LED as it is mostly normally termed as presented in pictorial (2), is mainly precisely a specific sort of diode as we require very alike voltaic surfacing to a PN intersection diode. This alludes that an LED will flow power in its advancing course but lump the stream of power in the opposite course [2], LEDs created from nobbled semiconductor with a diverse categories and stages to acquire a dissimilar shades and frequency, comprises a unlike frequency ingredients cast-off in LEDs and it's shade, regarded as energy and direction.



Figure 2: Typical types of LEDs

Around is LEDs has a slight score course and energy fewer than 3.3V that delivered from myRIO, so its commended to custom a chain regulator with the LED to distribute the power and to bound the movement direction to protect the LED from the over spill direction which sources to destroy the LED.

Plain application applied in the Lab segment where Figure (3) demonstrates the application that joins the discreate LED with myRIO which calculated in lab four segment, likewise the restraint course regulator.

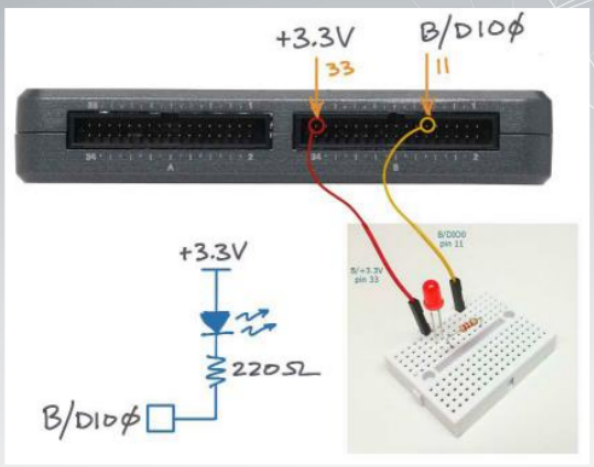

Figure 3: interfacing LED with myRIO

Lab five administers the connection amid myRIO gear and an input element like the push switches as presented in figure (4).

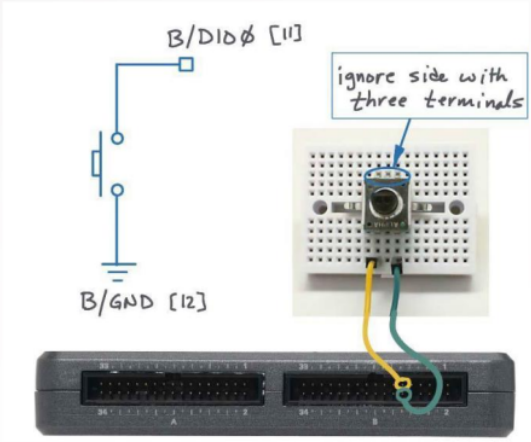

Figure 4: interfacing pushbutton with myRIO

Procedure

To hand are numerous experimentations executed for the connection amid myRIO and the exterior input and output apparatuses to evaluate the alignment processes of the connection, this link employed with a plain discrete LED to display exactly how to acquire a numerical switch motion from LABVIEW, this investigation provides an understanding for by what way to alphanumerically regulate every element via myRIO gear such as ON/OFF motors, ON/OFF solenoids,… etc. and the subsequent trial is completed to demonstrate just how to attach a numeral indicator in to LABVIEW via myRIO gear by an easy drive button, where this trials provides an understanding of in what way to scrutinize a numerical indicator from every input constituent such as controls, antennas.

Traffic light Exercise

Advance a LabVIEW sequence to regulate a traffic light with three LED's: Red, Yellow and Green. Trail this arrangement in manipulating the trick:

1) Firstly , red LED ought to power on for 5 seconds.
2) Secondly, green LED ought to power up for 2 seconds.
3) Finally, yellow LED ought to wink for 4 seconds.

This application employed grounded on the schematic illustration shown in figure (5).

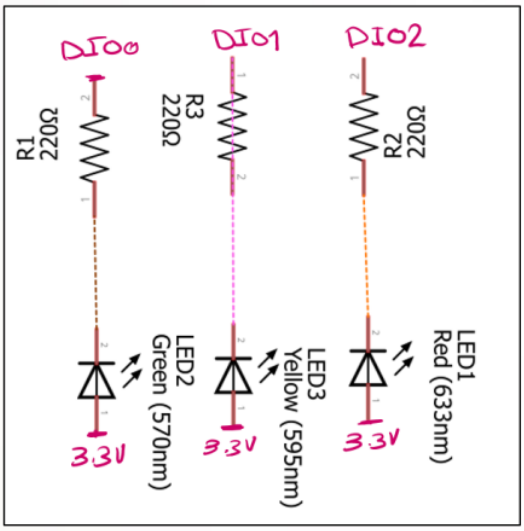

Figure 5: Schematic diagram of traffic light

- The anterior sheet comprises the three LEDs of the transportation light which employed via three color Boolean gauges with a plain ornament manufacturer to create the scheme link as presented in appendix [2].
- Block illustration of the transportation light accomplished by flat arrangement with three series, where the first one lights on the red LED for 5 seconds and rotating the other LEDs, then the second structure lights on the green LED for 2 seconds and lighting off the additional LEDs, then the newest series revolves the yellow LED for 3 second and turns off the subsidiary LEDs. Whereas ring castoff to create this system completed continually, as displayed in appendix [1].
- Cabling illustration of the course achieved by fritzing and the linking with myRIO centered on the pinout devoted in appendix [3].

Blinking LEDs with pushbutton Exercise

By push button and two LED's, expand a LabVIEW platform to wink one of the LED's if the pushbutton is compelled. Though, if the push button is not compelled the other LED winks.
This application executed grounded on the graphic illustration presented in figure (6).

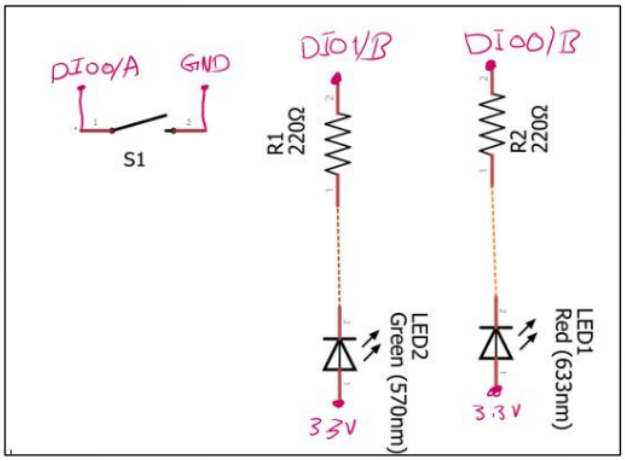

Figure 6: schematic diagram of Lab 5 exercise

- Case configuration cast-off and the case designated grounded on the eminence of the control

- Every item winks any LED and lights off the additional LED.
- Whereas hoop utilized to accomplish this assignment recurrently.
- Connecting a figure of the loop accomplished by fritzing and the joining with myRIO grounded on the datasheet [2].

Conclusion

This application assists us to construct a respectable observation of the connection problem amid LABVIEW and the exterior actual apparatuses identical to the LEDs and the pushbuttons by the sustained equipment from NI myRIO 1900, that is plain constructed and castoff for the evidence attainment or connecting. Such application intensifies the capability of applying the reproduction and trail illustration program.

Additional Paragraph

LED is a numerical product scheme Push switch is a numerical input scheme Potentiometer is referent input method. LED comprises two monitors, anode and cathode. Anode will link with positive current and cathode will join with the negative or zero current. (Anode voltage shall more than the cathode voltage to turn on the LED). Potentiometer is a adjustable regulator with three monitors, edge monitors linked with positive and zero current (GND), and the central monitor is the determining monitor (product monitor). Seven sections created from seven LEDs joined simultaneously with a mutual monitor (anode or cathode), so the kind of the section regardless of shared anode or mutual cathode.

References

[1] https://www.ni.com/pdf/manuals/376047c.pdf

[2] https://www.electronics-tutorials.ws/diode/diode_8.html

[3] https://www.ni.com/en-lb/shop/labview.html

Appendices

[1] Block diagram exercise one

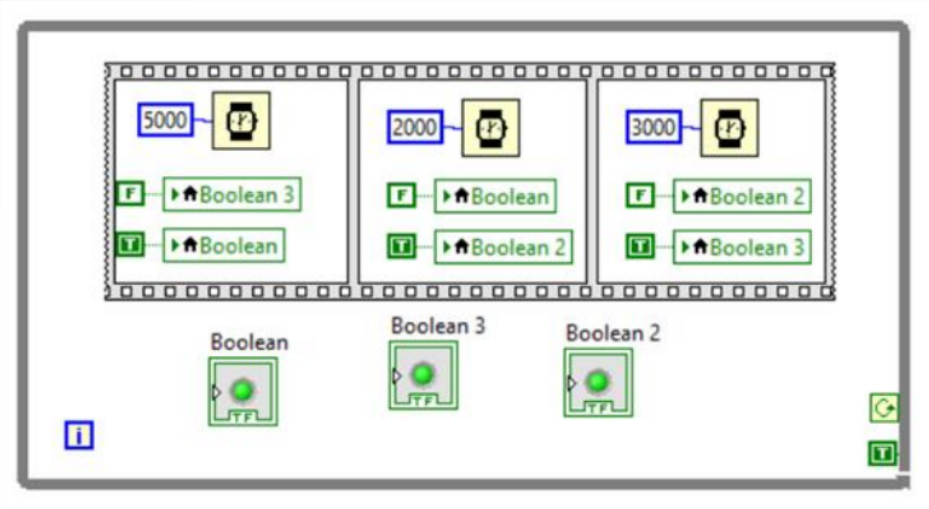

Figure 7: Block Diagram of traffic light exercise

[2] Front panel of traffic light exercise

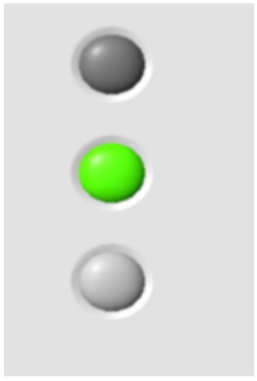

Figure 8: Front Panel Traffic light exercise

[3] Wiring diagram of traffic light exercise

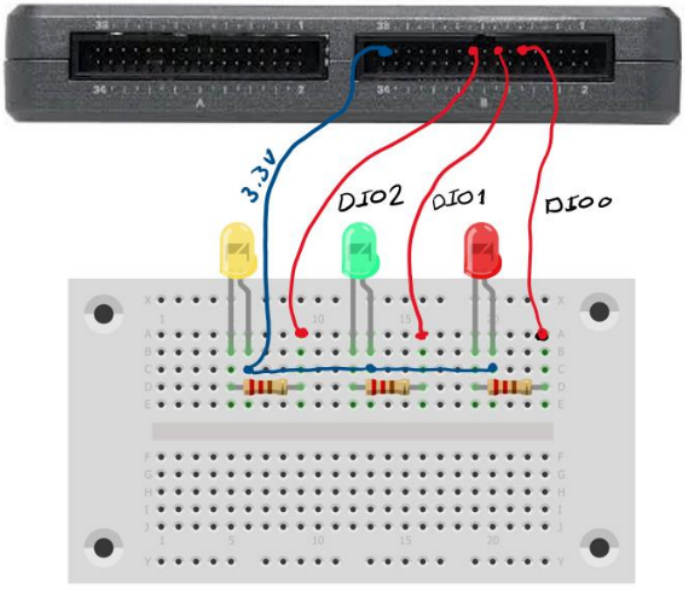

Figure 9: Wiring diagram expertise one

[4] Block diagram of exercise two (true case)

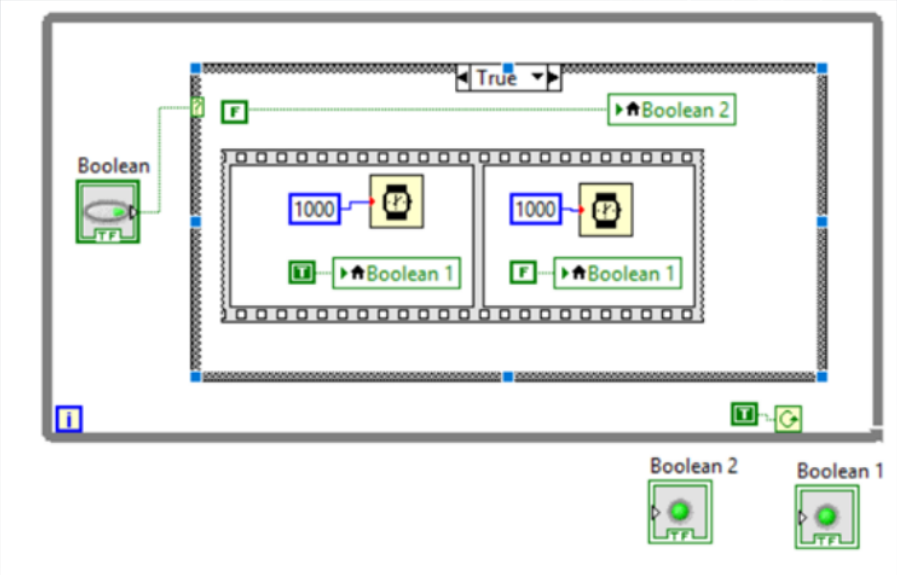

Figure 10: Block diagram of true case in expertise two

[5] Block diagram of false case in pushbutton exercise.

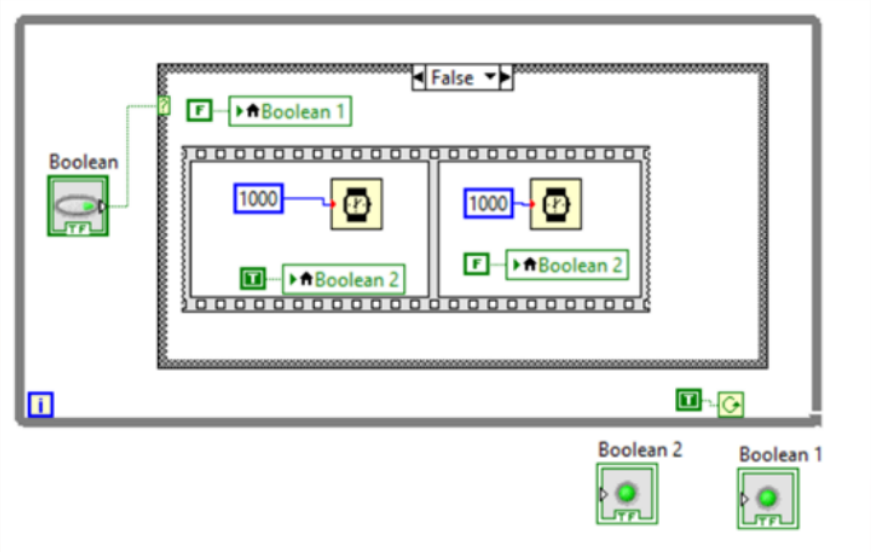

Figure 11: Block diagram of false case in expertise two

[6] Front panel of exercise two

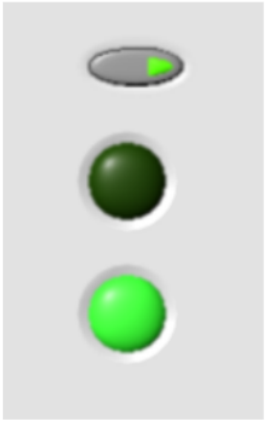

Figure 12: Front panel of expertise two

[7] Wiring diagram of Lab five exercise

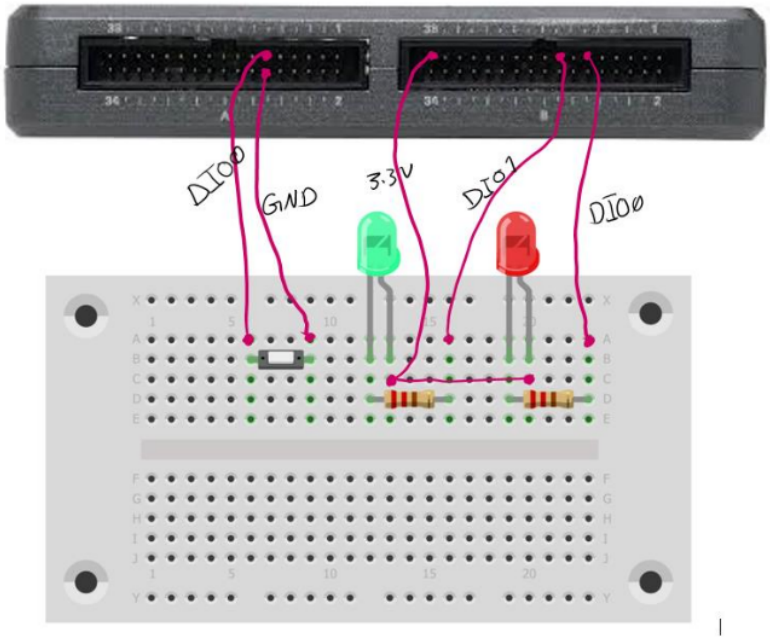

Figure 13: Wiring Diagram of the pushbutton exercise

paraphrase

ORIGINALITY REPORT

4%	4%	0%	1%
SIMILARITY INDEX	INTERNET SOURCES	PUBLICATIONS	STUDENT PAPERS

PRIMARY SOURCES

1	www.electronics-tutorials.ws Internet Source	2%
2	Submitted to University of Greenwich Student Paper	1%
3	www.slpk.sk Internet Source	1%
4	irl.umsl.edu Internet Source	<1%

Exclude quotes	Off	Exclude matches	Off
Exclude bibliography	Off		

paraphrase

GRADEMARK REPORT

FINAL GRADE

/0

GENERAL COMMENTS

Instructor

PAGE 1

PAGE 2

PAGE 3

PAGE 4

PAGE 5

PAGE 6

PAGE 7

PAGE 8

PAGE 9

PAGE 10

PAGE 11

PAGE 12

PAGE 13

PAGE 14

PAGE 15